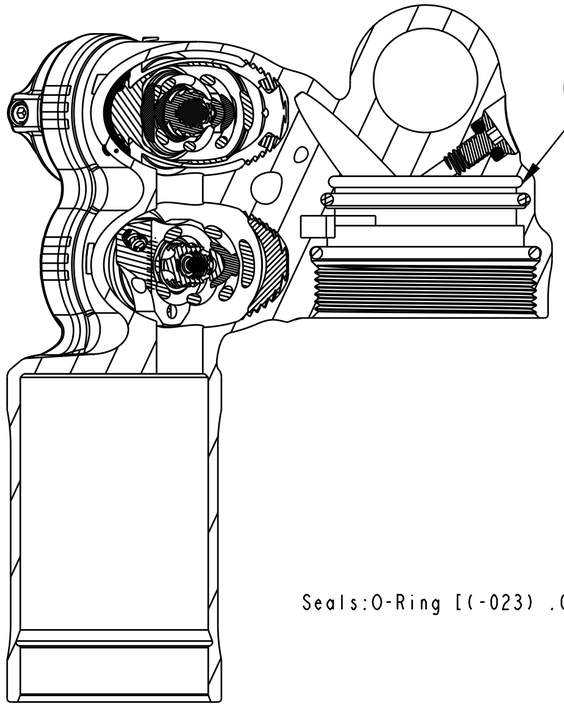

IMPORTANT:
DO NOT INSTALL O-RING
IN STRAIN RELIEF.

SECTION B-B
SCALE 1.500

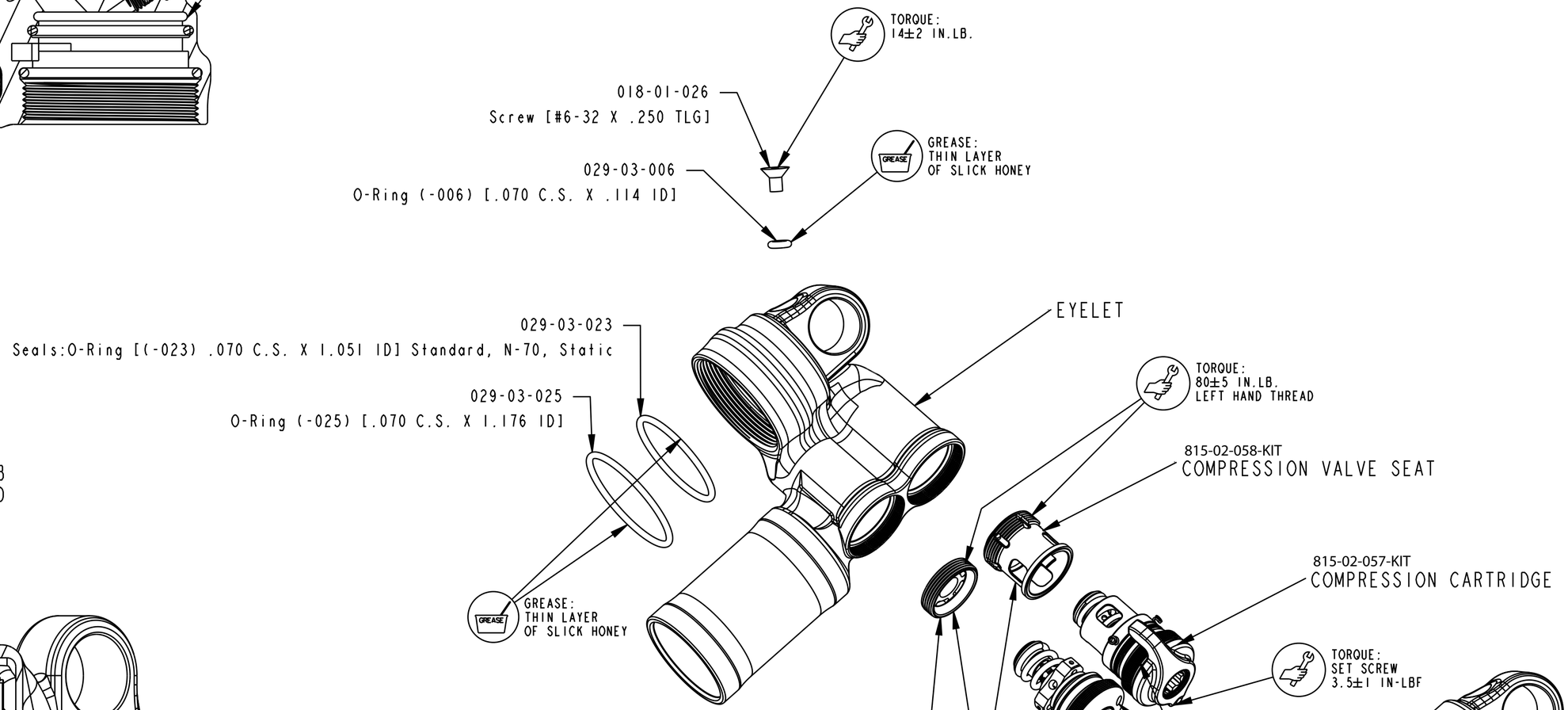

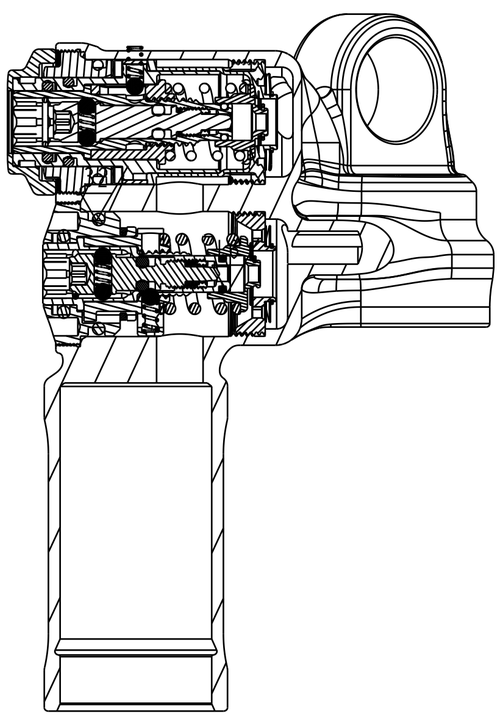

SECTION C-C
SCALE 1.500

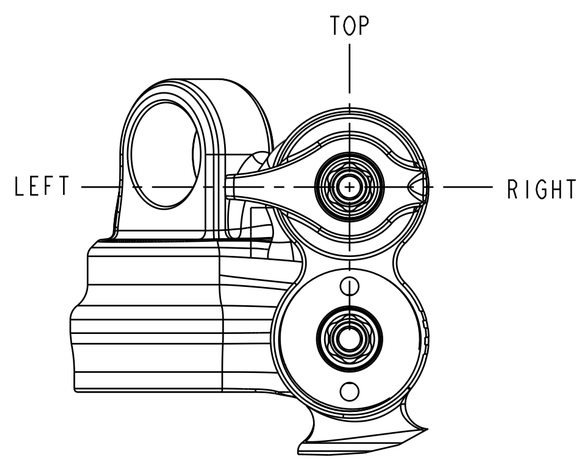

SCALE 1.500
SEE SHEET 2 FOR DETAILS

- PROPRIETARY-
THIS DOCUMENT CONTAINS CONFIDENTIAL, PROPRIETARY INFORMATION
THAT IS FOX PROPERTY. DO NOT DISCLOSE TO OR DUPLICATE
FOR OTHERS EXCEPT AS AUTHORIZED BY FOX.

FOX Factory, Inc.
130 Hangar Way, Watsonville, CA 95076 USA
Ph 831-768-1100
Fax 831-768-9312

TITLE
Assembly Drawing: Eyelet,
2017, DHX2, FloatX2, 2pos-Adj

SIZE C
DWG.NO. 808-17-235-KIT
PLOT SCALE 1.00:1
SHEET 1 OF 2

ProE ASSEM