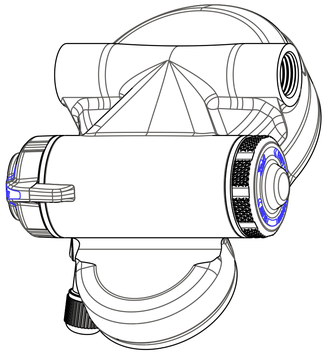

210-03-254
Eyelet Cap Assembly: DPX2, Rebound

029-08-145
Seals: o-ring [15.5mm ID X 1.5mm CS], N-70, Static

804-00-152-KIT
Eyelet Cap Assembly: DPX2, Rebound

(039-00-399)

210-24-369
Float DPX2, Port Selector Valve

210-24-373
Float DPX2, Port Selector Valve

GREASE:
THIN LAYER
HIGH TEMP BLUE

IMPORTANT:
ADJUSTER IN END CAP MUST BE SET TO "ALL OUT"
POSITION BEFORE INSTALLATION INTO EYELET

Eyelet: Shaft End, 2018 Float DPX2, Trunnion

IMPORTANT:
ORIENTATION
CRITICAL

TORQUE:
90±5 IN LB

TORQUE:
110±5 IN LB

210-24-272
Float DPX2, Port Selector Valve

210-24-369
Float DPX2, Port Selector Valve

039-00-399
Spring: Detent [.50 TLG, .312 OD, 1 lb/in]

804-00-154-KIT
Eyelet Cap Assembly: DPX2, Compression, F-S

DAMPER ADJUSTMENT ASSY

IMPORTANT:
ORIENTATION
CRITICAL

029-03-025
O-Ring (-025) [.070 C.S. X 1.176 ID]

815-02-088-KIT
Damping Adjust Assembly: CD, DPX2, F-S, 3pos, LSC

029-08-164
Seals: O-Ring [6.5mm ID x 1.5mm CS] Metric, N-70, Static

GREASE:
THIN LAYER
SLICK HONEY

TORQUE:
90±5 IN LB

210-03-225
Damping Adjust Part: 3pos Knob, Float DPX2, F-S

029-08-030
Seals: O-Ring [10.0MM ID x 1.5MM CS] Metric, N-70, Static

GREASE:
THIN LAYER
HIGH TEMP BLUE

TORQUE:
35±5 IN LB

019-01-018
Socket Set Dog Point [M3 x .5mm x 6mm]

029-00-032
Seals:O-Ring [(-032) .070 C.S. X 1.864 ID] Standard N674-70, Dynamic

OIL:
THIN LAYER
FLOAT FLUID

TORQUE:
3.5±1 IN LB

IMPORTANT:
ADJUSTER IN END CAP MUST BE SET TO "ALL OUT"
POSITION BEFORE INSTALLATION INTO EYELET

802-00-037-KIT
Air Valve Assy: Short & Slim [M6 X .75 X .990 TLG], Steel

010-00-057
Air Valve Parts: Cap, Air Valve [.305-32], Black, 6061

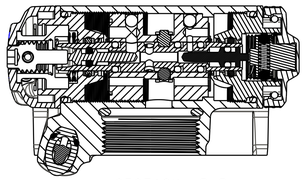

SECTION B-B

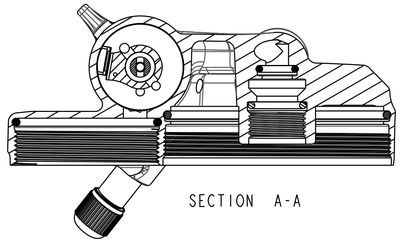

SECTION A-A

FOX Factory, Inc.
130 Hangar Way, Watsonville, CA 95076 USA
Ph 831-768-1100
Fax 831-768-9312

TITLE
Eyelet Assy:
2018 FLOAT DPX2, F-S, 3pos, Open
Mode Adj, Trunnion, Short Tank Valve

SIZE D | DWG. NO. 808-17-392-KIT

PLOT SCALE 1.50:1 | SHEET 1 OF 1

- PROPRIETARY -
THIS DOCUMENT CONTAINS CONFIDENTIAL, PROPRIETARY INFORMATION
THAT IS FOX PROPERTY. DO NOT DISCLOSE TO OR DUPLICATE
FOR OTHERS EXCEPT AS AUTHORIZED BY FOX.