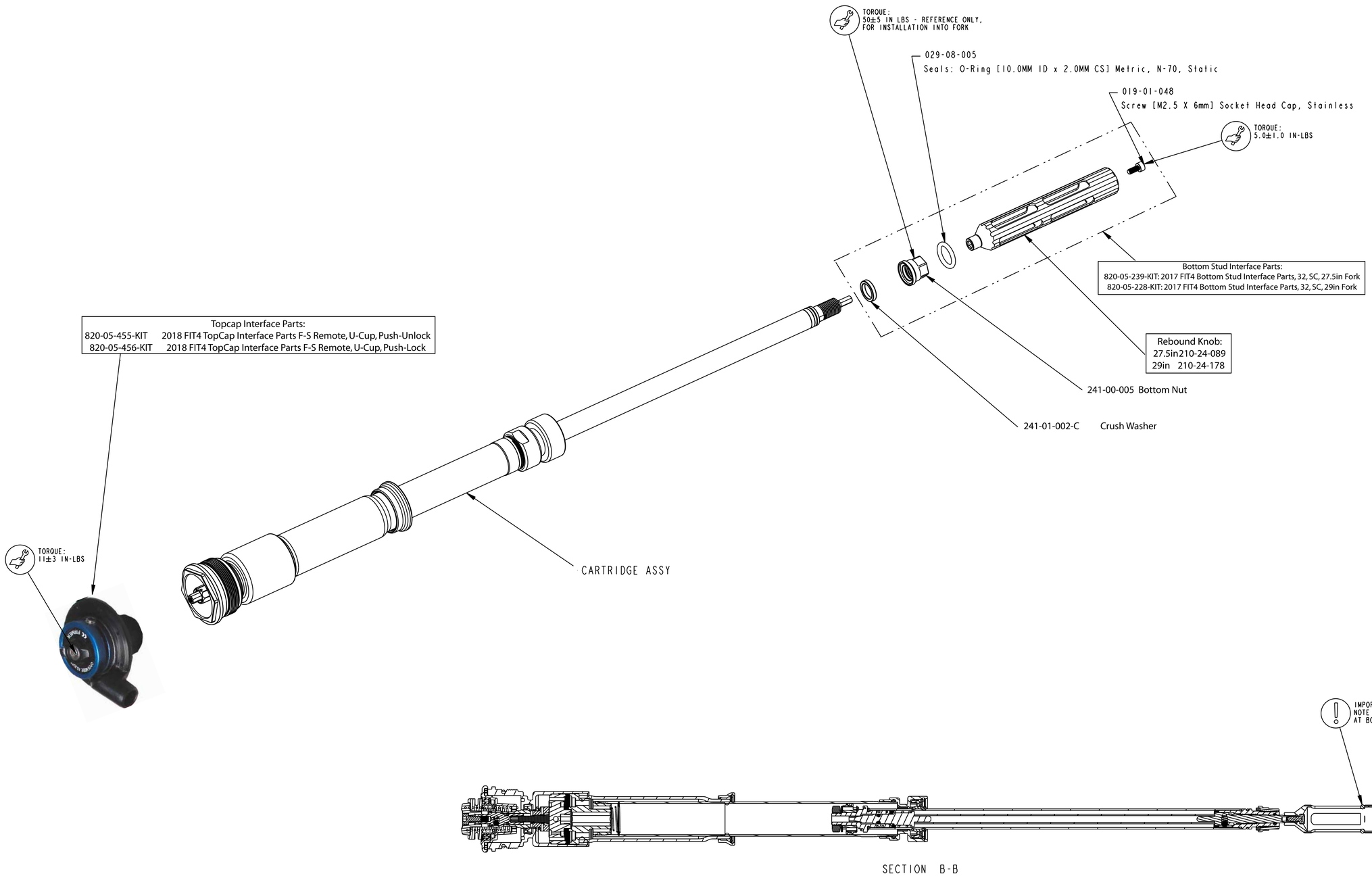


FOX Factory, Inc.
130 Hangar Way, Watsonville, CA 95076 USA
Ph 831-768-1100
Fax 831-768-9312

TITLE
2018 32mm 27.5in/29in 80-100 FIT4
SC F-S Remote Cartridge Complete

SIZE D | DWG. NO.

PLOT SCALE 1.00:1 | SHEET 1 OF 1

- PROPRIETARY -
THIS DOCUMENT CONTAINS CONFIDENTIAL, PROPRIETARY INFORMATION
THAT IS FOX PROPERTY. DO NOT DISCLOSE TO OR DUPLICATE
FOR OTHERS EXCEPT AS AUTHORIZED BY FOX.